AAR boiler load blocking diagrams

This file contains scans of original 1938 and 1951 AAR documents provided by Jerry Hamsmith. These document recommended practices for blocking boiler loads on railroad flat cars for safe transport. We hope you use this file to complete your Resin Car Works boiler load.

Details from the 1938 rules are presented first and 1951 details follow.

Association of American Railroads

OPERATIONS AND MAINTENANCE DEPARTMENT

MECHANICAL DIVISION

RULES GOVERNING

THE

Loading of Commodities On Open Top Cars

(For Loading Closed Cars, See Code of Rules Published by the A. A. R. Transportation Division)

Adopted by the

Former Master Car Builders' Association
as Recommended Practice,
1896

Advanced to Standard 1908

Revised 1937

EFFECTIVE JANUARY 1, 1938

Published by the Association of American Railroads
Transportation Building, Washington, D. C.
59 East Van Buren Street, Chicago
1937

Printed in U. S. A.

Fig. 145

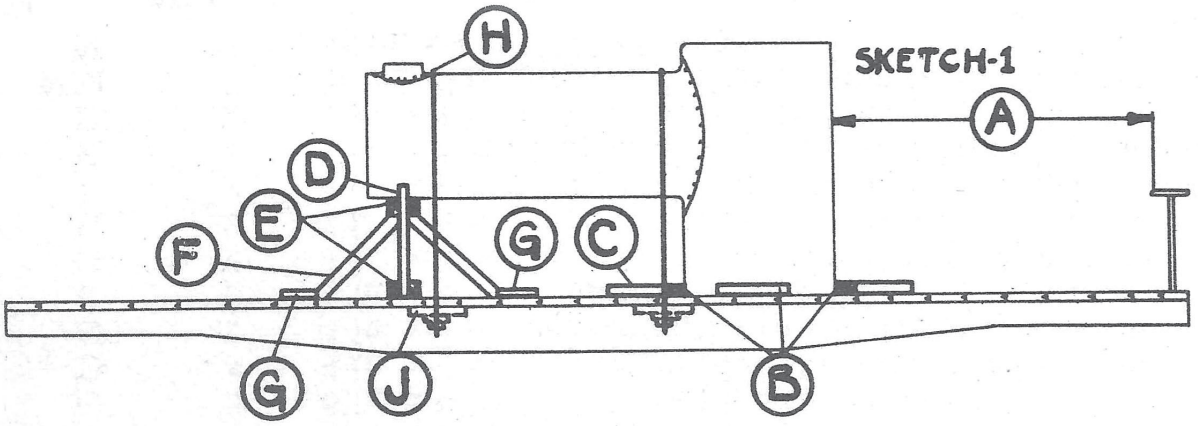

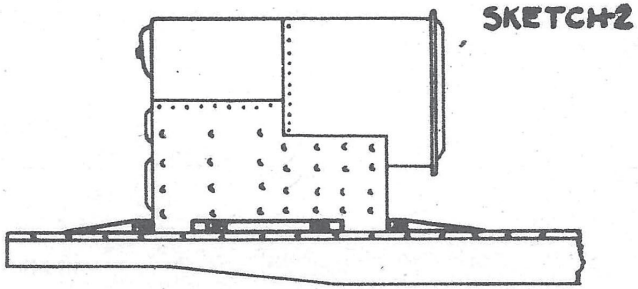

MINIMUM REQUIREMENTS FOR SECURING SMALL AND LOCOMOTIVE TYPE BOILERS—FLAT OR GONDOLA CARS

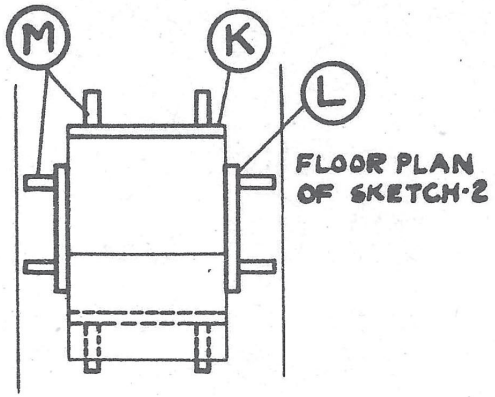

Item	No. of Pcs.	Description
A		Brake wheel clearance. See Fig. 2.
B	4	2 in. x 4 in. x 15 in., hardwood, nailed to floor.
C	4	2 in. x 4 in. x 12 in., nailed to floor.
D	2	2 in. x 4 in., hardwood, length to suit.
E	4	2 in. x 4 in., hardwood, length to suit, nailed to items "D", and floor.
F	4	2 in. x 4 in., hardwood, length to suit, nailed to items "D", "E", "G" and floor. Angularity must not exceed 45 degrees with floor.
G	4	2 in. x 4 in. x 12 in., nailed to floor.
H	2	$\frac{5}{8}$ in. dia., with washers, length to suit. When rods pass through stake pockets use $\frac{1}{2}$ in. x 4 in. x 10 in. plate under stake pockets. High tension bands, 2 in. wide, total strength 10,600 lbs. each, may be substituted.
J	4	2 in. x 4 in. x 18 in., or $\frac{3}{8}$ in. x 4 in. x 6 in. plate.
K	2	4 in. x 4 in., hardwood, length equal to $\frac{2}{3}$ width of fire box, nailed to floor.
L	2	4 in. x 4 in., hardwood, length equal to $\frac{1}{2}$ length of fire box, nailed to floor.
M	8	4 in. x 4 in., wedge shaped, nailed to floor.
		Boilers per sketch 2, having an overhang of 18 in. or over on smoke box end, must be supported same as for sketch 1.

See General Rules for further details.

PAMPHLET No. MD-5

Association of American Railroads

OPERATIONS AND
MAINTENANCE DEPARTMENT

MECHANICAL DIVISION

RULES GOVERNING

THE

Loading of Miscellaneous Commodities On Open Top Cars

Adopted by the
Former Master Car Builders' Association
as Recommended Practice, 1896

Advanced to Standard 1908

EFFECTIVE JULY 1, 1951

Published by the Association of American Railroads
59 East Van Buren Street, Chicago 5
1951

Printed in U. S. A.

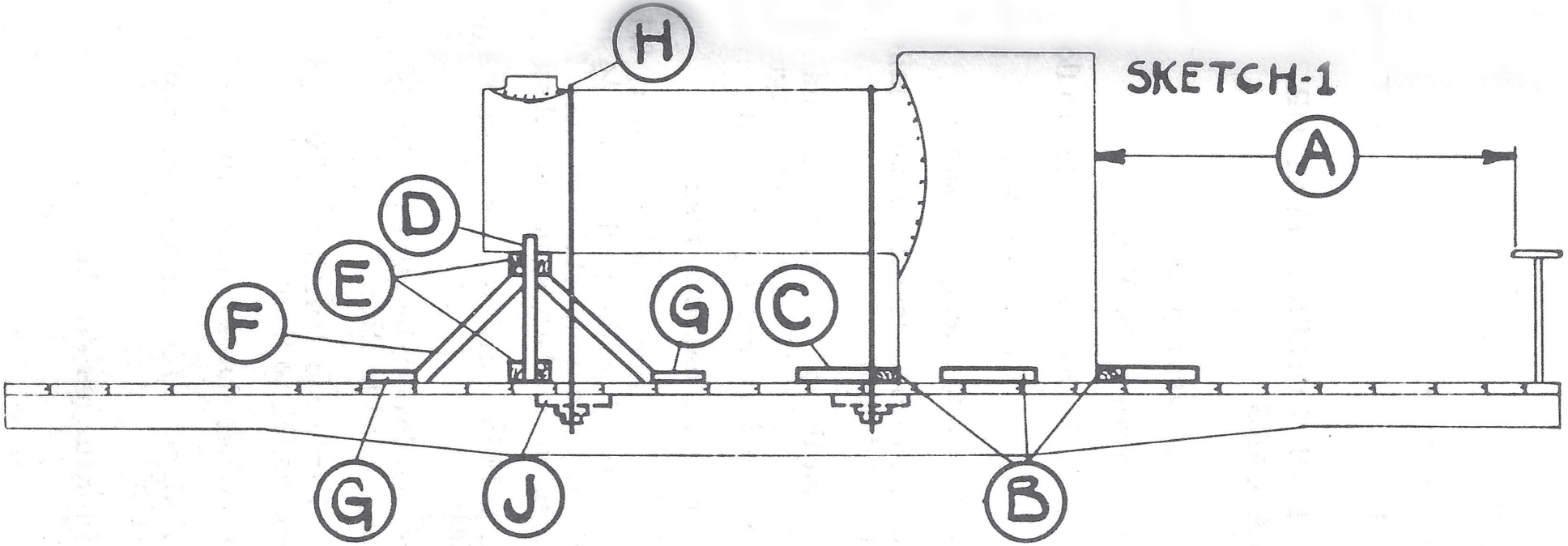

SKETCH-1

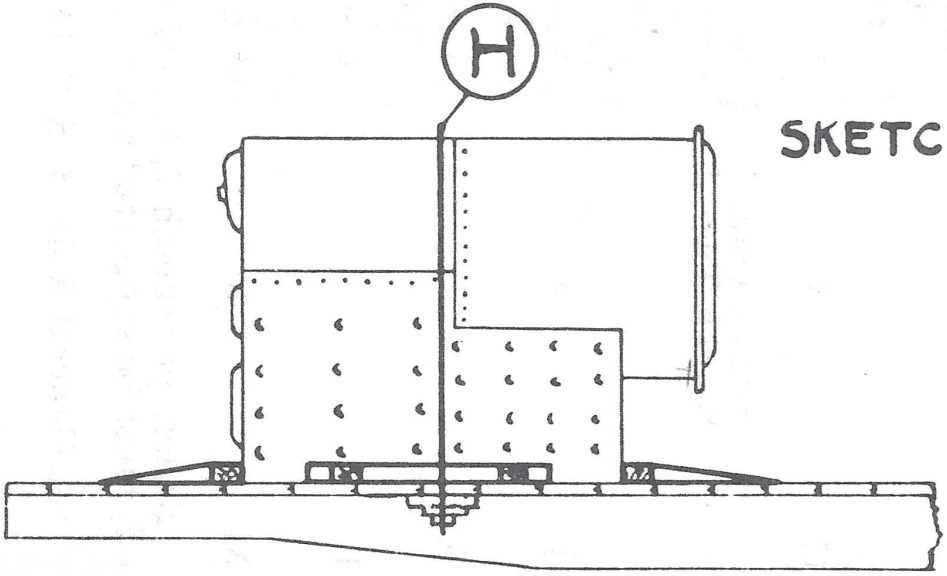

SKETCH-2

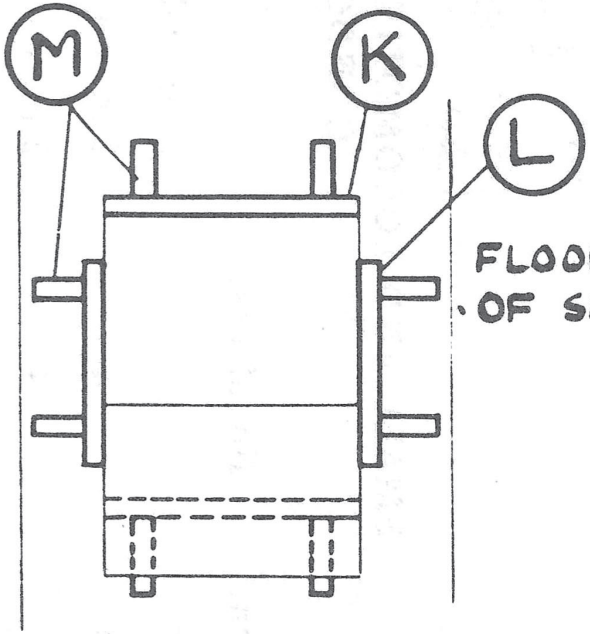

FLOOR PLAN OF SKETCH-2

Fig. 17

SMALL AND LOCOMOTIVE TYPE BOILERS—FLAT OR GONDOLA CARS

Item	No. of Pcs.	Description
A		Brake wheel clearance. See Fig. 2.
B	4	2 in. x 4 in. x 15 in., hardwood, nailed to floor.
C	4	2 in. x 4 in. x 12 in., nailed to floor.
D	2	2 in. x 4 in., hardwood, length to suit.
E	4	2 in. x 4 in., hardwood, length to suit, nailed to Items "D" and floor.
F	4	2 in. x 4 in., hardwood, length to suit, nailed to Items "D", "E", "G" and floor. Angularity must not exceed 45 degrees with floor.
G	4	2 in. x 4 in. x 12 in., nailed to floor.
H	Sketch One, 2. Sketch Two, 1.	5/8 in. dia., with washers, length to suit. When rods pass through stake pockets use 1/2 in. x 4 in. x 10 in. plate under stake pockets. 2 in. x .050 in. high tension bands, may be substituted.
J	4	4 in. x 4 in. x 18 in., hardwood, or 1/2 in. x 4 in. x 12 in. plate.
K	2	4 in. x 4 in., hardwood, length equal to 2/3 width of fire box, nailed to floor.
L	2	4 in. x 4 in., hardwood, length equal to 1/2 length of fire box, nailed to floor.
M	8	4 in. x 4 in., wedge shaped, nailed to floor.

Boilers per sketch 2, having an overhang of 18 in., or over, on smoke box end, must be supported same as for sketch 1.

See General Rules 4, 5, 9, 14 and 15 for further details.